ALTERNATIVE FORM

ON MATTER, MATERIALITY, AND SPACE

John Quaine

DEDICATION

I dedicate this document to faith and family. Thank you for your infinite love, support, and encouragement.

No bird soars too high, if he soars with his own wings.

William Blake

CONTENTS

INTRO 01

STATEMENT 05

STUDY MODEL 07

OBJECT INTERACTION 15

SUSTAINABLE MATERIAL PRACTICE 23

THRESHOLD INSTALLATION 31

POSTSCRIPT 41

BIBLIOGRAPHY 43

THIS DOCUMENT IS THE CULMINATION OF A YEAR-LONG INVESTIGATION OF FORM. MORE PRECISELY, FORM IS TREATED AS THE MEANS AND THE END; AS THE METHOD FOR TESTING AS WELL AS THE OBJECT BEING TESTED. THE RESULT IS NOT ONLY NEW UNDERSTANDINGS OF SPACE AND MATERIAL, BUT OF COLLECTIVITY AND SOCIAL EXPERIENCE. AT ITS CORE IS A REIMAGINING OF ONE OF ARCHITECTURE'S MOST FUNDAMENTAL ATTRIBUTES: FORM.

INTRO

ONE OF THE BIGGEST design cliché's, "form follows function,"[1] is both inaccurate and commonly misused. The phrase was first coined by American architect Louis Sullivan, who, when describing form asserted "that form ever follows function".[1] This meant that architecture, both buildings and objects, express their function in their appearance. This, in addition to Mies' "less is more," became the mantra for modernity.

With the advent of digital formalism, architects have now stepped into the role of innovators in form generation. Without question, the computer liberated architecture from the right angle and enabled the construction of complex geometry, yet how we generate architectural form remains in question. Namely, what happens when form is 3D-printed or digitally fabricated? The hand is certainly present, yet significantly reduced. Above all, what will define the architecture of this emerging era? It is time to re-imagine the role of the architect by acknowledging the potentials that exist within digital technology, while attempting to rediscover 'old-school' making as a means of generating alternative forms. Thus, a synthesis between digital technology and built architecture must take place. By investigating in this way, it is not expected to prescribe a particular form that should emerge should emerge in conclusion, but rather suggest a manner in which architects rethink their approach to practice in general, in an effort to discover alternative possibilities for the built environment.

> We are convinced that no algorithm, no optimization, no simulation, no system and no machine alone can lead to architectural quality. Technological performance will always be complemented and preceded by human desire, intelligence and sensibility.[2]
>
> - Gramazio and Kohler

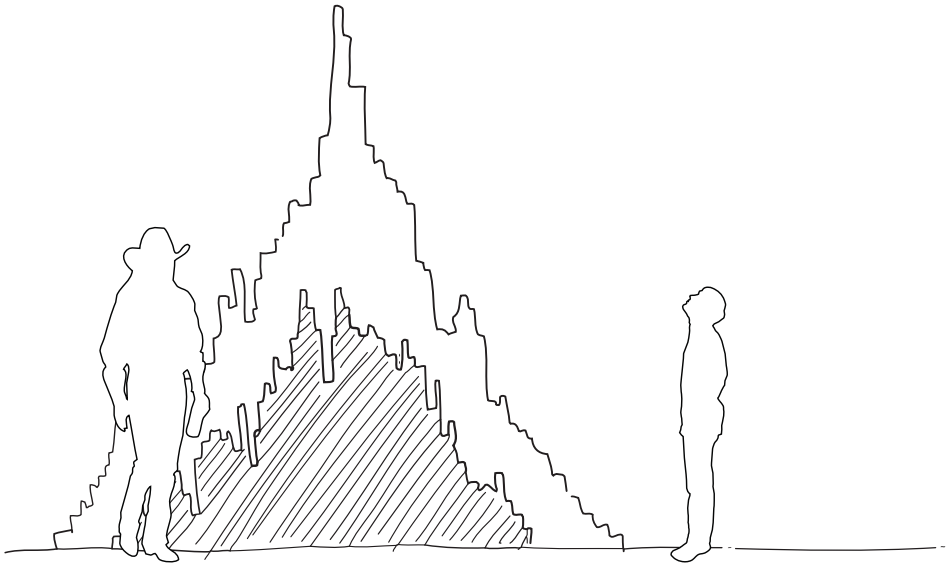

Digitized Hand Sketch

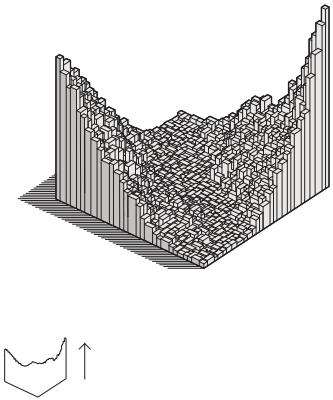

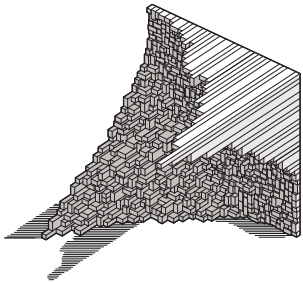

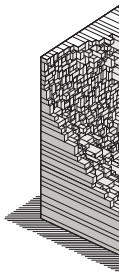

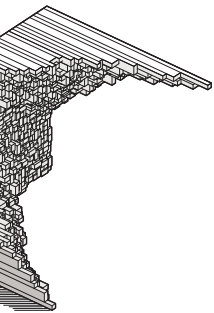

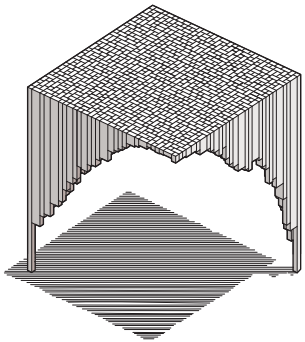

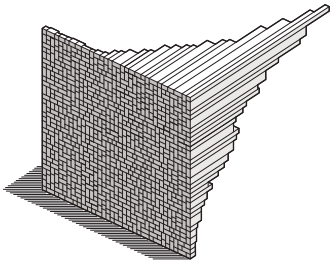

Projections

STATEMENT

FORMED OBJECTS are all around us. Whether it be the juxtapostion of buildings in a major city or a collection of small items in a house, form shapes our everyday life. For example, the presence of physical form gives us a sense of direction, placement, and orientation in space. Thus, form is not solely about an aesthetic encounter, but rather a navigational tool that physically links us to the intangible. Space, on the other hand, evokes an empty, formless quality. This was first articulated as a physical construct in "The Production of Space" by Henri Lefebvre. Lefebvre, referred to this pre-existing, limitless expanse beyond all human understanding as "absolute space"[3]. On the contrary, he posits his own theory known as "social space"[3], which claims that space is produced when two or more people engage in social activity. This project does not necessarily accept or reject either theory, but rather attempts to inject its own into the conversation: space is produced by the physical, psychological, and sensorial interaction between architecture (object) and human (subject). This is achieved by testing and examining the juxtaposition of physical form and the public realm in the form of an 1:1 installation. This process beckons the simple question: how do people, either individually or collectively, interact with form? And can form actively participate in its own right? By establishing a connection between between architecture and subject, suggesting ways in which the two interact, new space is produced.

This project thus confronts not only new understandings of space and material, but of collectivity and social experience. At its basic premise is a re-imagining of one of architecture's fundamental attributes - form.

By etablishing a connection between architecture and subject, suggesting new ways in which the two interact, new space is produced.

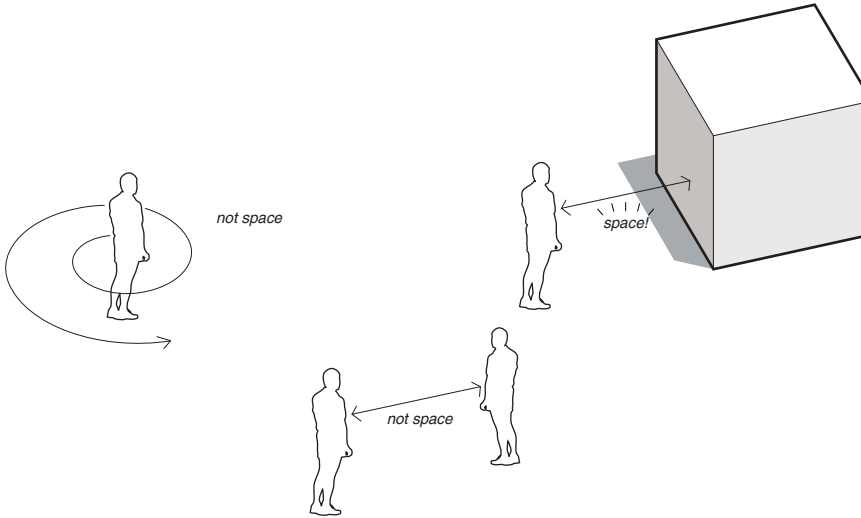

Diagram of Spatial Theories

STUDY MODEL

THIS STUDY MODEL was generated in an effort to demonstrate the effects of contrasting spatial conditions (inside-outside, solid-void, above-below, hard-soft, etc.). Namely, it was meant as a study of inside-outside relationships. For instance, the outside of the study model resembles a smooth, taut surface, whereas the interior is a rich, dense, hypertexturized landscape of peaks and valleys. This study continued as several models were produced after the fact, with each subsequent model using the previous as a conceptual basis to build upon.

Nesting was also a conceptual theme in the production of these model iterations. Like the nesting most commonly seen in the form of the "Russian Doll," and architecturally in Suo Fujimoto's 'House N.' The nesting of multiple objects placed in space creates an apparent difference between solid and void.

Basswood Model

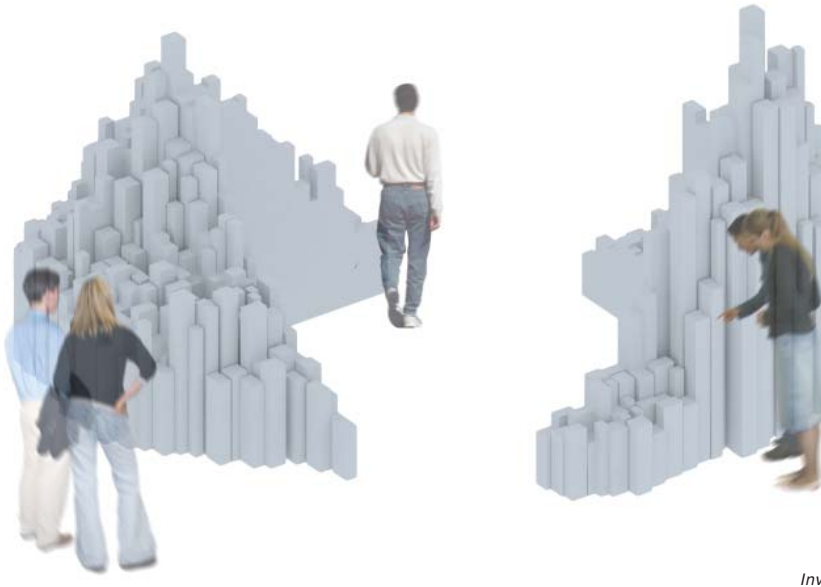

Inverse Models

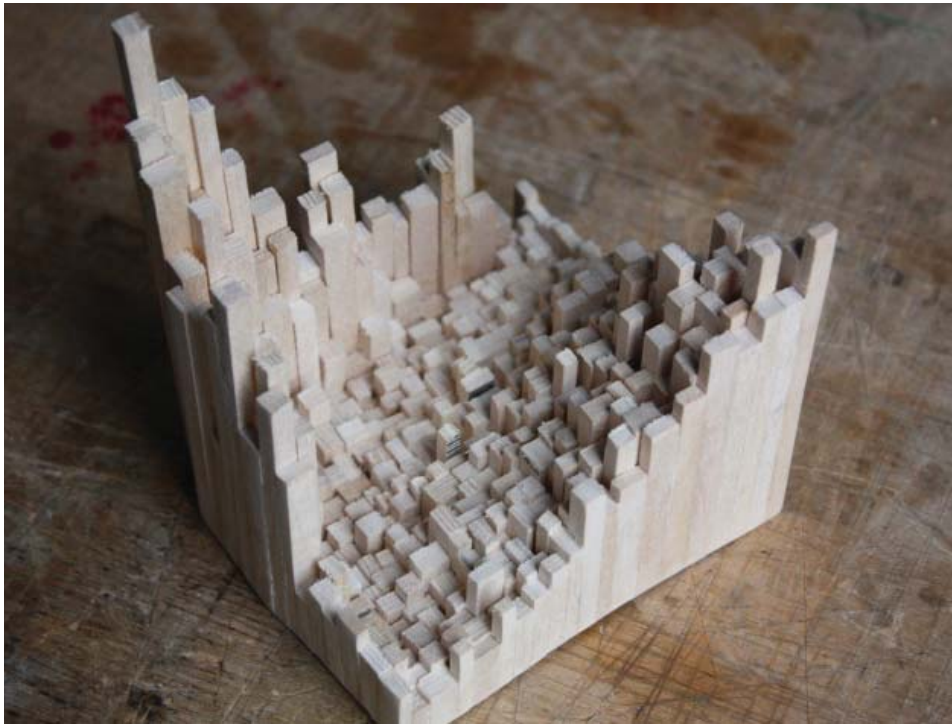

First Iteration (left)
Model Nesting (above)

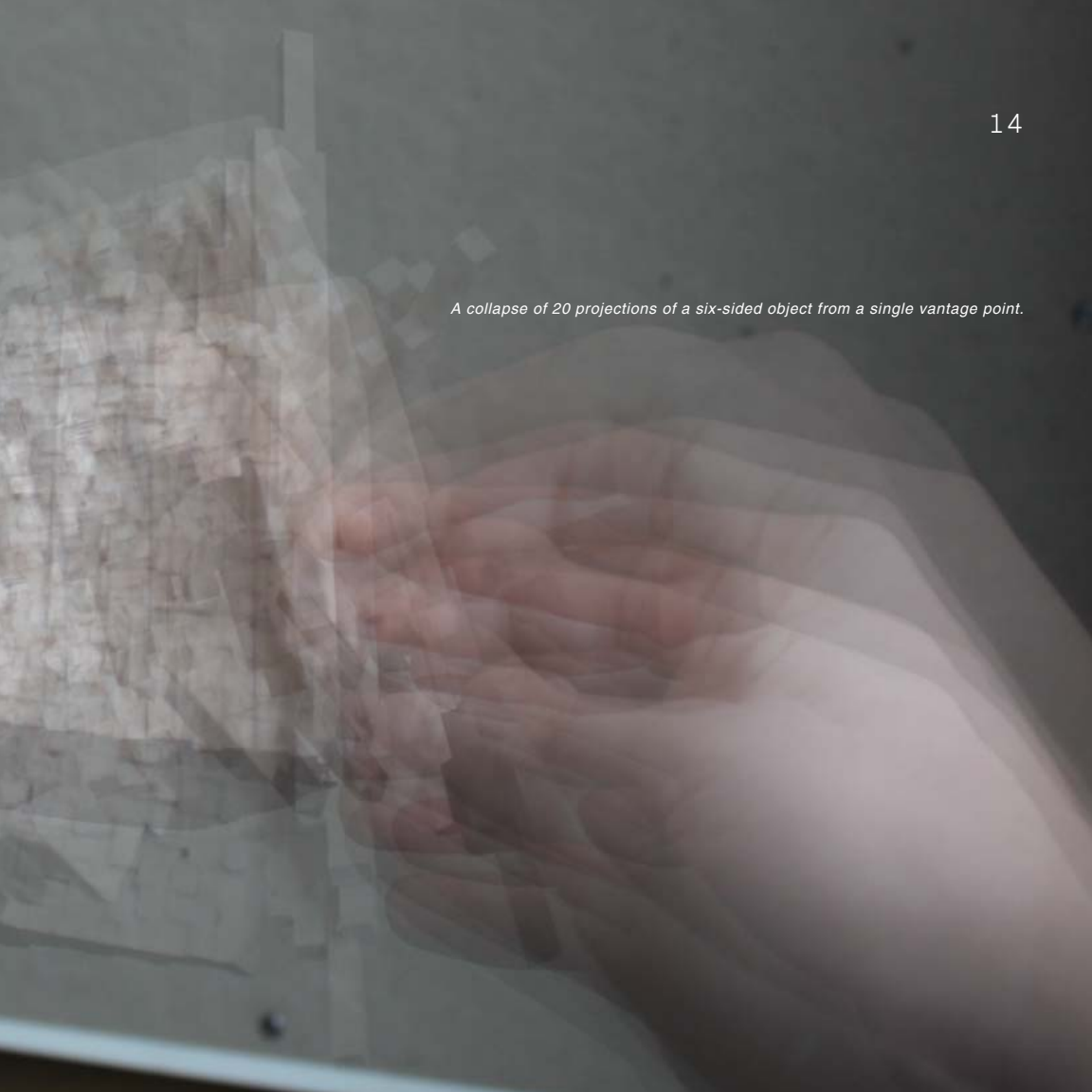

A collapse of 20 projections of a six-sided object from a single vantage point.

OBJECT INTERACTION

CAN INANIMATE OBJECTS participate in their own right? This is the question at the fore of this thesis proposal. It is time to approach form through an alternative lense that seeks to engage the public realm in evocative ways. Form can be a powerful gesture or a subtle move, but how it is able to captivate the attention of the passerby is key. Typically, this encounter is due to the object's attentiveness to its own iconicity. Whether it be its shape, structure, materiality, color, or texture, the passerby is provoked to stop momentarily. If this appeal is intense enough to beckon physical, psychological, or spatial interaction, then the passerby now becomes the user/inhabitant. In this capacity, the perceptual value of the form evokes a sense of wonder, inviting her to physically explore and inspect the object in greater depths, fulfilling her original curiosities. The more enigmatic an object is about its function or use, the more likely it is to draw upon the unkown. By presenting a challenging form, one that lacks clear boundaries or legible hierarchies, this project hypothesizes that the object will demand interaction. To this point, the object tests its own ability to actively participate in an exchange between object and subject subject This, of course, requires an active response on behalf of the object itself, producing new qualities of space in the process.

This enigmatic object (right) is not deliberate about suggesting specific activities to the user, but rather it invites the user to discover new ones. These dense objects can either stand alone as objects in their own right or friction fit together as a larger whole. The series of smaller objects can be arranged according to the users' desires. After enough public use, the objects tend to naturally drift apart into smaller groups, and depending upon their placement and orientation, create new spatial possibilities. The composition of groups is solely up to the discretion of the user(s).

If this is truly an object for people, then let them claim it.

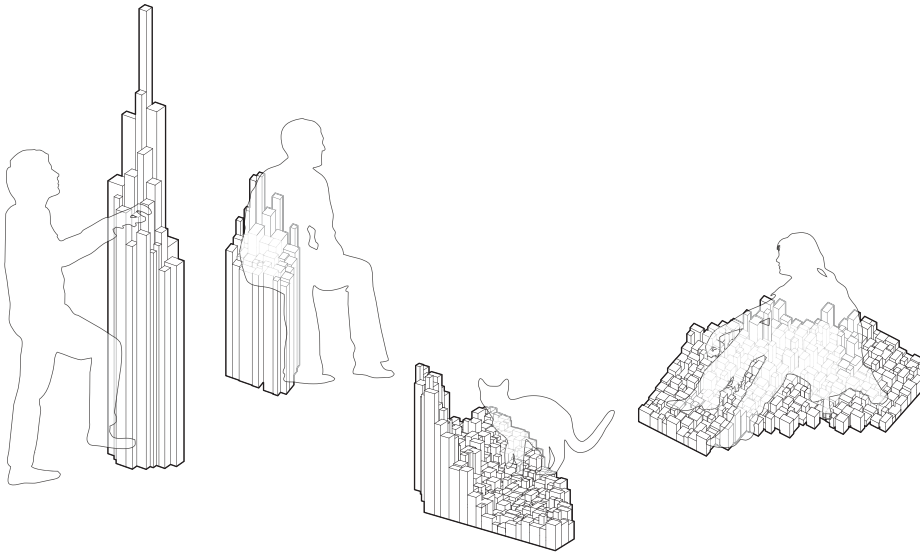

Diagram illustrating the object as a whole versus its constituent parts.

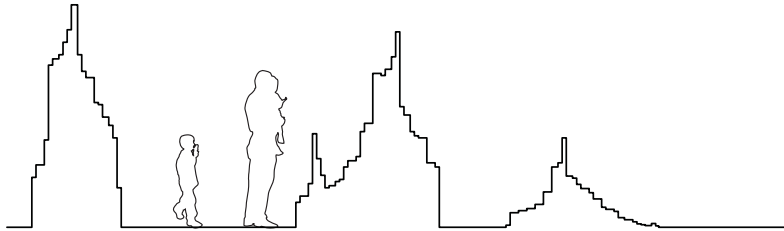

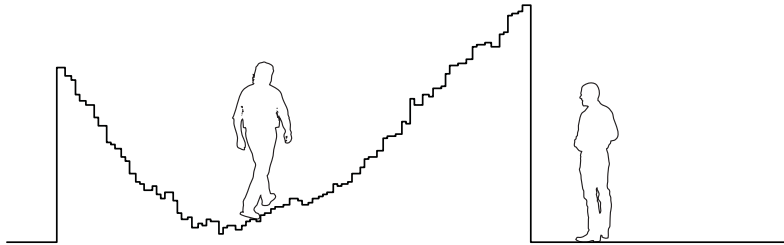

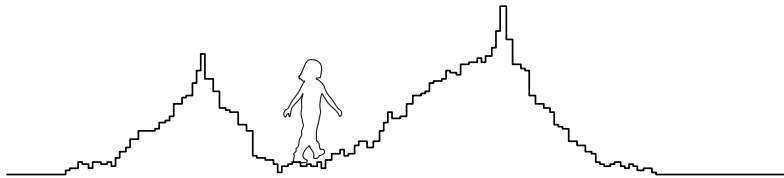

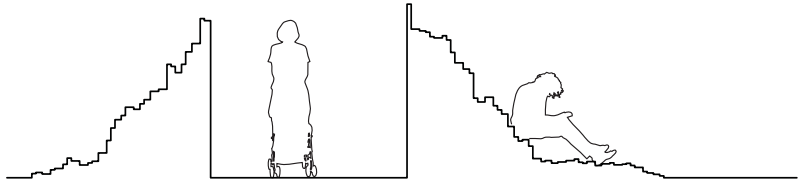

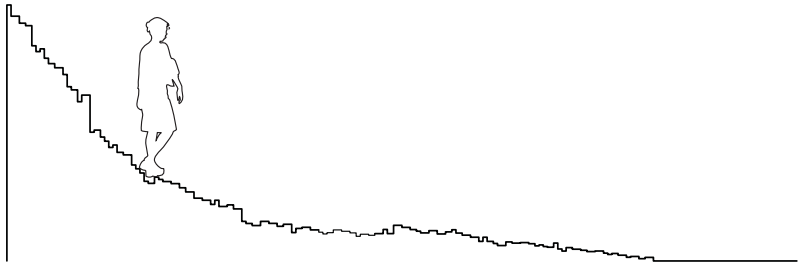

Profile Iterations

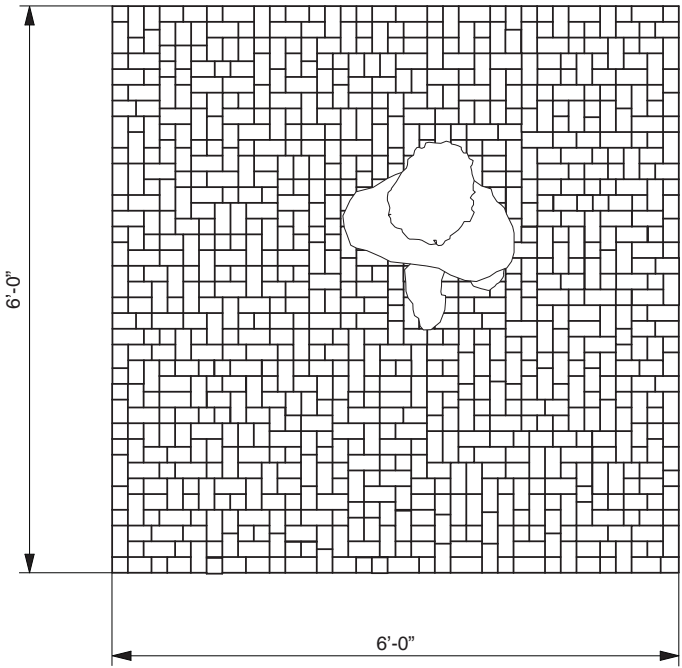
6'-0"
6'-0"

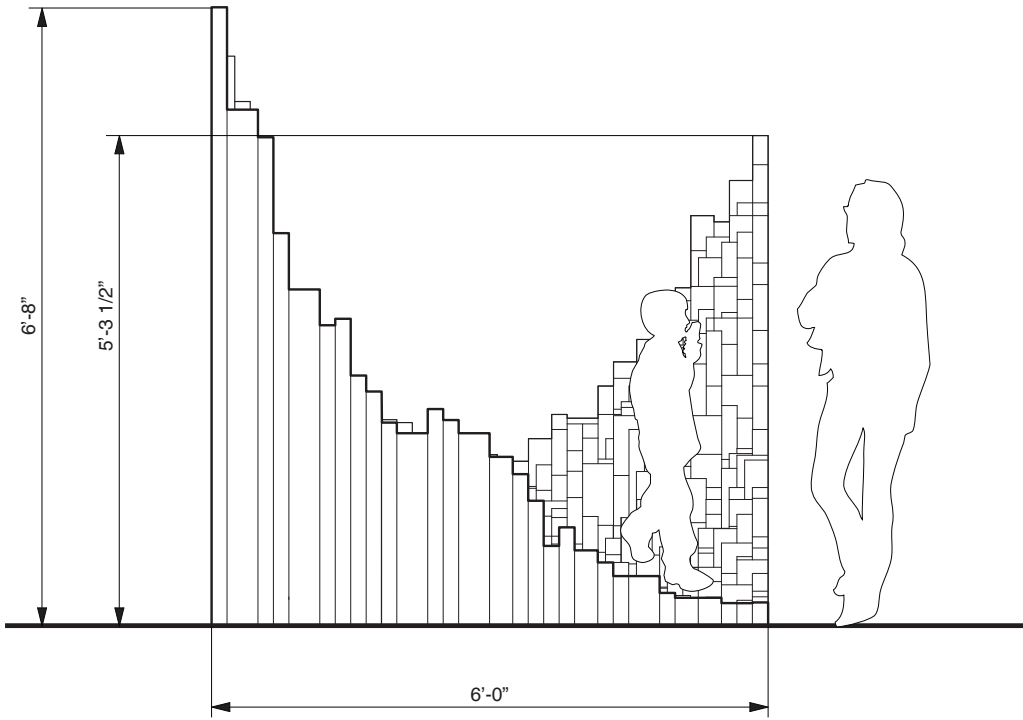

Plan (left)
Elevation (above)

1

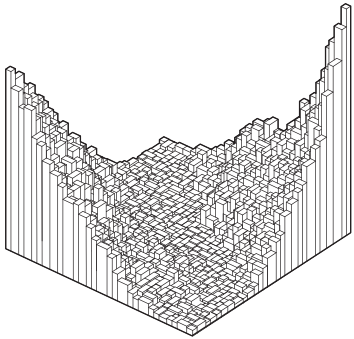

2

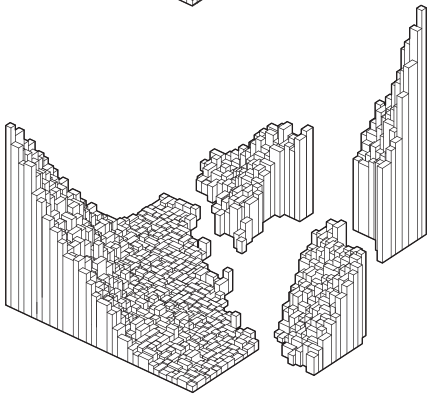

3

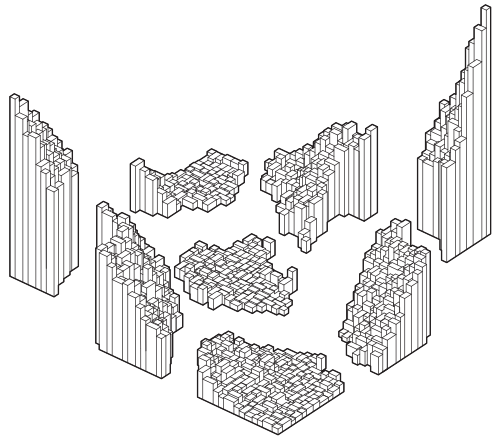

4

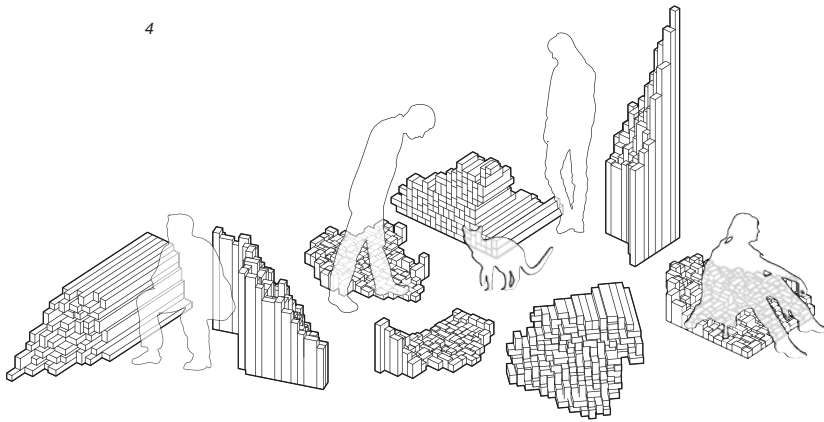

Diagram Cont. (p. 16)

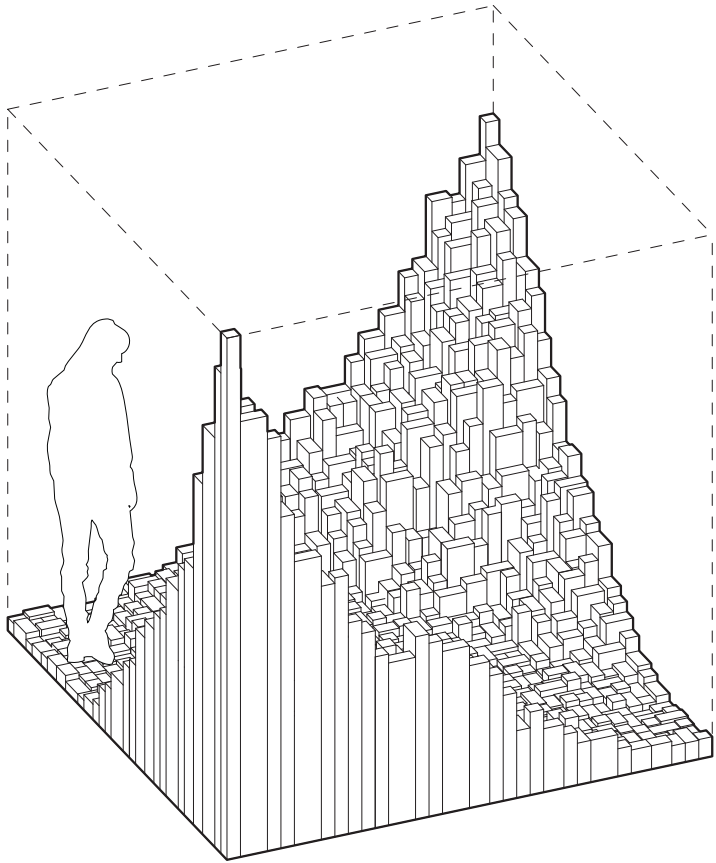

Projecting up from the ground like an inverted cave, this dense, wooded structure beckons the engagement of the passerby to move through or linger in. Upon entry, the dweller is provoked by the unevenness of the ground below, causing her to climb, sit, and socialize in the space, momentarily delivering her from the outside context. At either end, towering peaks extend overhead, creating gradual swells of volume that envelope the body.

SUSTAINABLE MATERIAL PRACTICE

BY CONFLATING speculative methods of construction with discarded building materials, found conditions are exploited in an effort to reclaim the primacy of physical and spatial experience. Hardwood edges called "cut-offs" are shaved pieces of lumber that lack a dimensional consistency, rendering them useless in standardized construction. Since this by-product is produced faster and less efficiently than it is to burn, chip, or discard, this project seeks to consider new uses for the excess material through methods of speculative design and construction.

As the research soon concluded, most local hardwood mills have taken advantage of sustainable trends. In fact, of the mills that were contacted, most of them manage to utilize every possible resource in order to minimize the amount of waste that they produce. Furthermore, since public interest in re-use and recycling of wood has increased, a market for acquiring the excess material has surfaced in the meantime.

In pursuit of acquiring material, big box retailers like Home Depot and Lowes, as well as local lumber yards were approached for scraps. Five hundred linear feet of 1x2 pine from a 75% off clearance pile was obtained in the process. The furring strips were bowed, cracked, and knotted, rendering them useless as as viable construction material. The opportunity with 1x2's was that it offered a dense mass when applied in large quantities.

Once acquired, the wood was then sorted into groups according to length. In an attempt to maximize yield (usable material) and minimize waste, each piece was precisely cut to size and bound together with its corresponding group.

THE OPPORTUNITY WITH 1X2'S WAS THAT IT OFFERED A DENSE MASS WHEN APPLIED IN LARGE QUANTITIES.

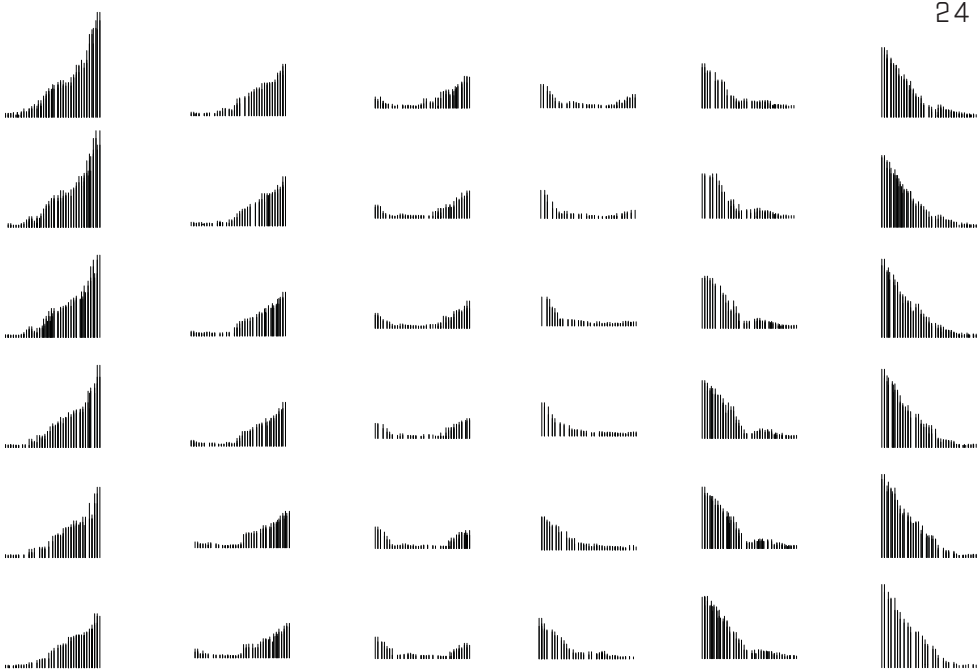

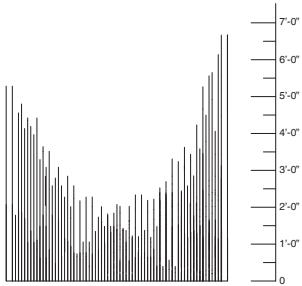

1,453 LF

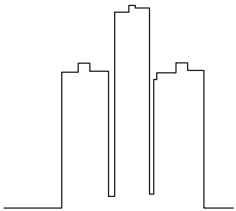

x 2

Assembly Matrix

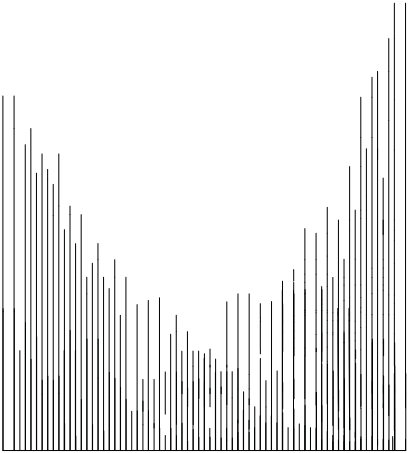

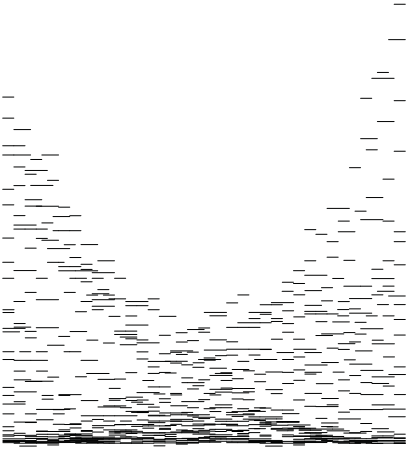

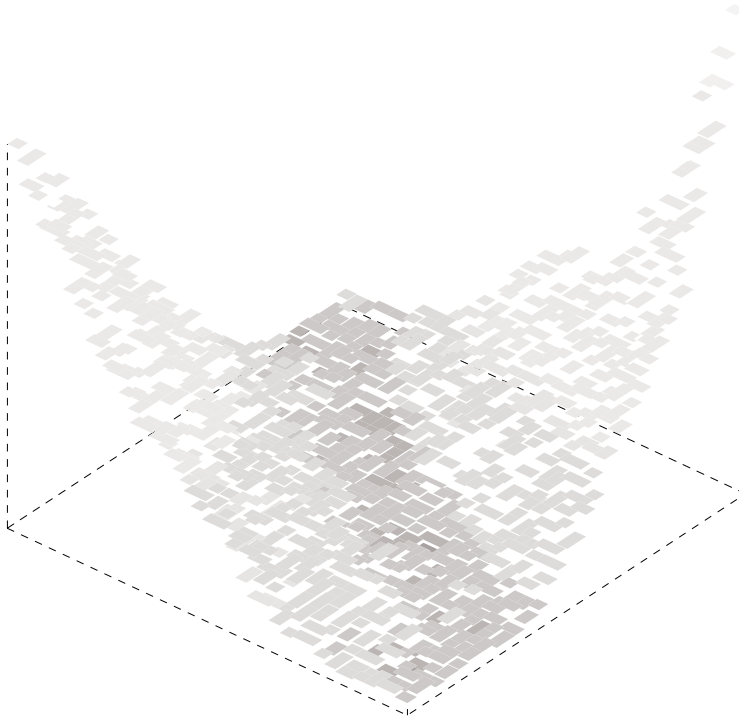

Line Density Diagram (left)
Circulation Diagram (above)

Lumber Sorting System

Lumber Sorting Cont.

THRESHOLD INSTALLATION

THE BASIC PREMISE of the *threshold* installation was to test and examine the possibilities of object/subject interaction. Also, it was intended to exhaust all possible physical configurations. In order to propose an elegant mass, standard threshold dimensions and objective measurments of the body were taken into account to determine the profile of each arching section. Each section can be reassembled according to the discretion the user(s). By enabling the user to reconfigure the mass, different densities of wood define new compositions of form and space. As a cloud in the distant sky is able to change its form based on different desities of water and air, this model is capable of transforming due to different accumulations of mass. The spacing between each 1x2 allows for appertures of light and air, in addition to rendering the overall form as a solid volume.

Threshold Installation - Reconfigured

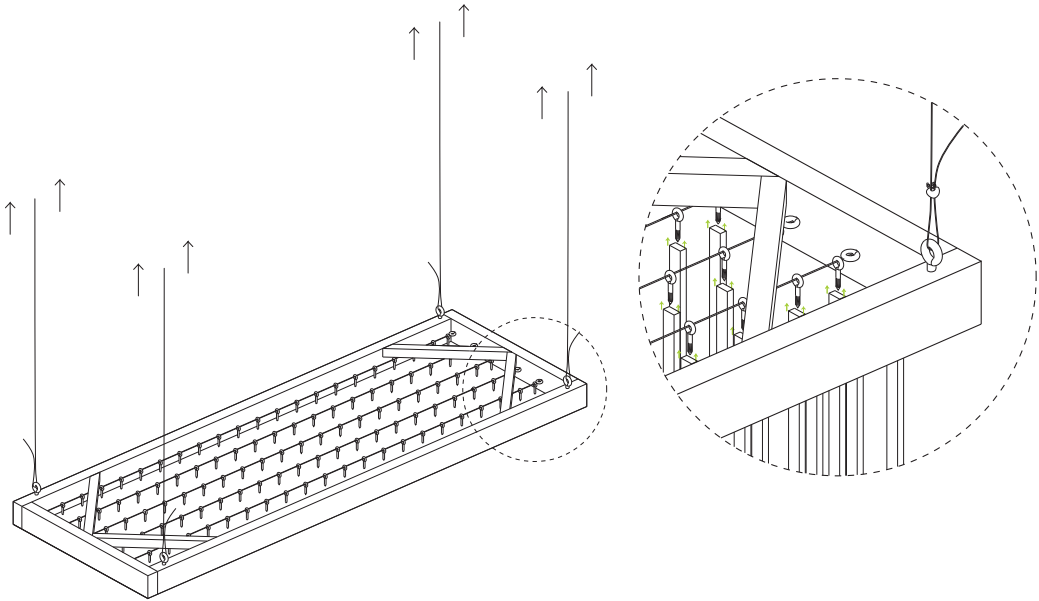

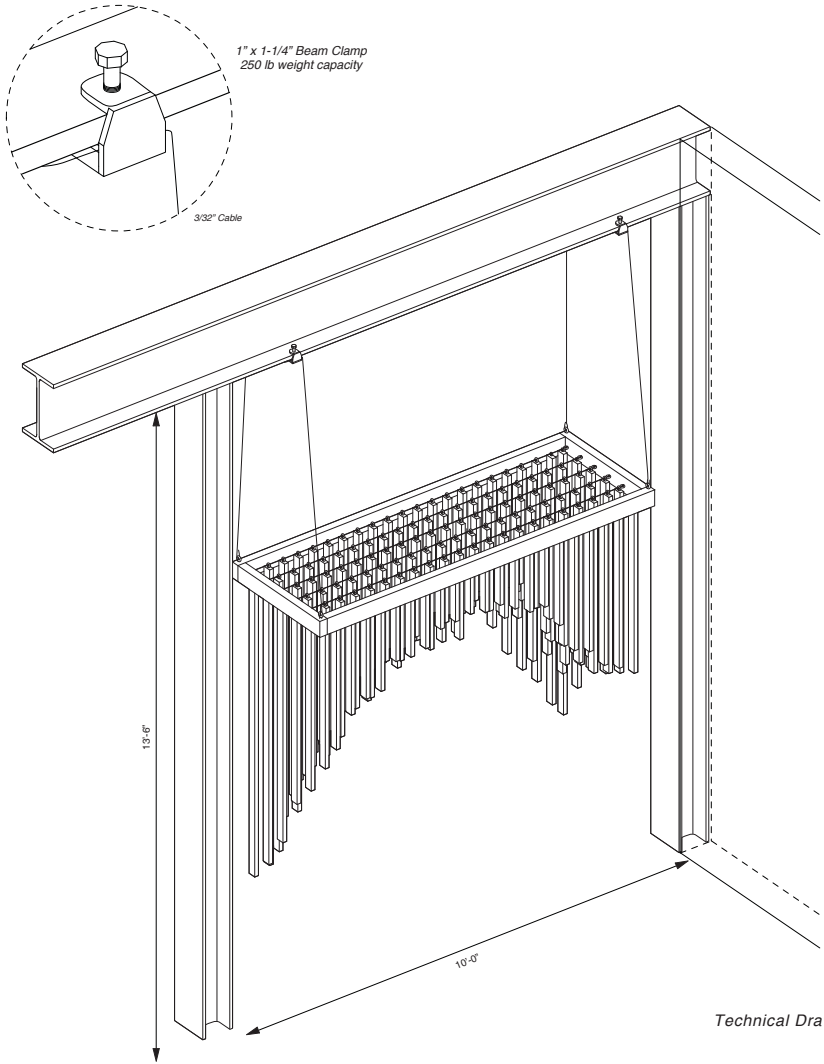
1" x 1-1/4" Beam Clamp
250 lb weight capacity
3/32" Cable
13'-6"
10'-0"

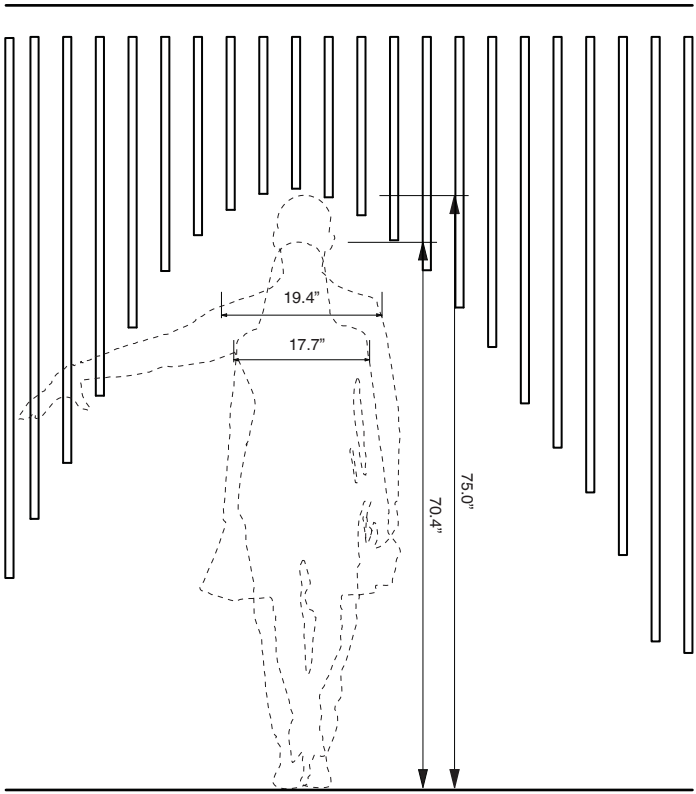
19.4”
17.7”
70.4”
75.0”

Installation - Movement
Spatial Affordances (left)

cluster

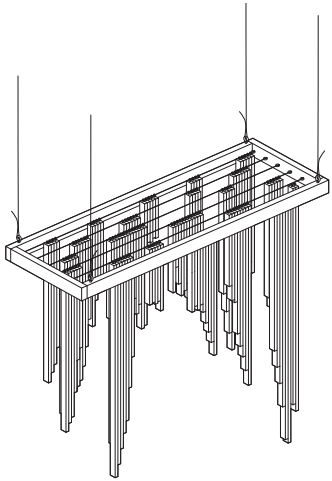

bunch

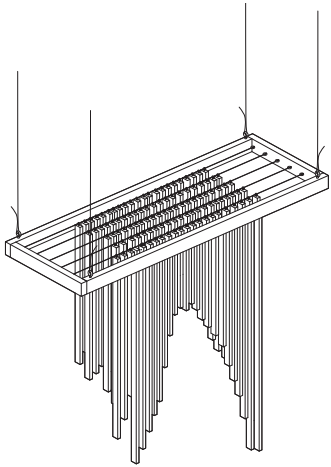

part

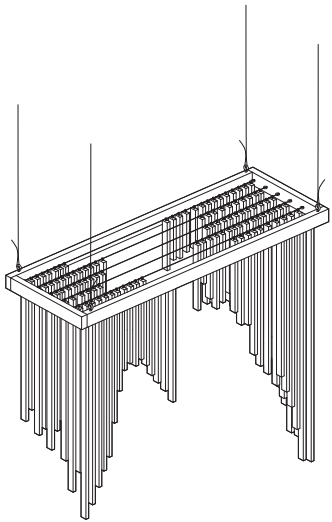

shift

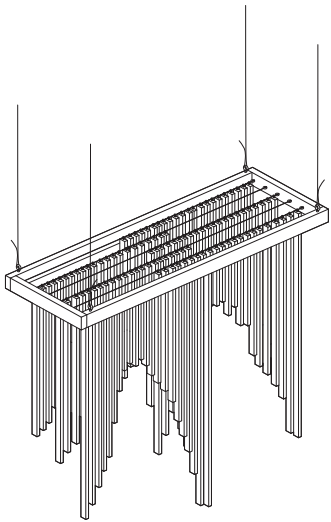

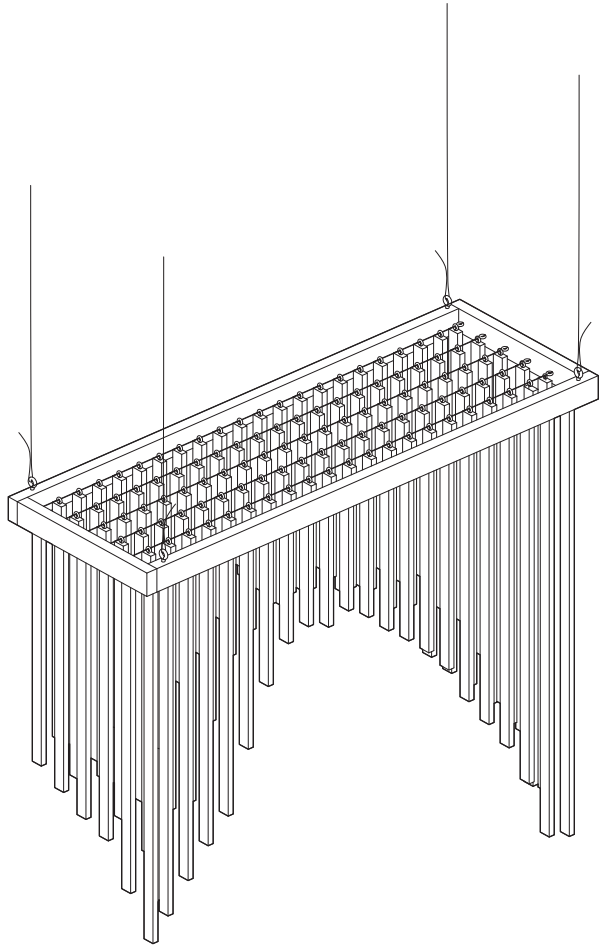

uniform

POSTSCRIPT

FORM AND SPACE are separate entities, yet indivisible in nature. Without the presence of physical things, we forfeit our ability to discern the intangible. Thus, the inevitable link between form and space was uncovered through this process. From the beginning, the conclusion of this project was not intended to prescribe a specific form, but rather to transition from mere speculations to reality in an effort to test a simple hypothesis. From the study models to the drawings to the staging of the installation, this whole investigation was treated as a means to test and examine how form lends itself to spatial experience. The idea of movement in space emerged as an unanticipated compliment to this project. In addition to sensory experience, traveling through the threshold condition revealed purpose in its intent to allow the passerby to pass through or linger in.

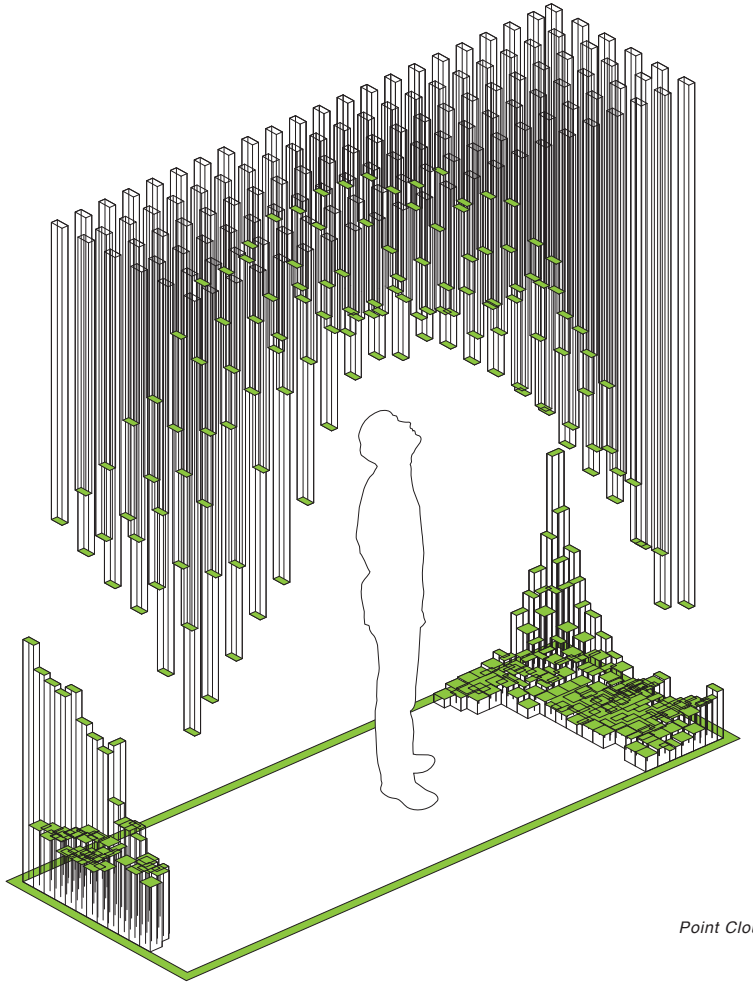

Point Cloud Diagram

BIBLIOGRAPHY

Hays, K. Michael. Architecture's Desire: Reading the Late Avant-garde - Critical Architecture: Between Culture and Form. Cambridge, MA: MIT, 2010. Print.

Heidegger, Martin. Poetry, Language, Thought - Building, Dwelling, Thinking. New York: Harper & Row, 1971. Print.

Iwamoto, Lisa. Digital Fabrications: Architectural and Material Techniques. New York: Princeton Architectural, 2009. Print

Lai, Jimenez. Citizens of No Place: An Architectural Graphic Novel. New York: Princeton Architectural, 2012. Print.

Lefebvre, Henri. The Production of Space. Oxford, OX, UK: Blackwell, 1991. Print.

Locke, John. An Essay concerning Human Understanding. New York: Dover Publications, 1959. Print.

Grobman, Yasha, and Eran Neuman. Performalism: Form and Performance in Digital Architecture. London: Routledge, 2012. Print.

Roman, Antonio. Eero Saarinen: An Architecture of Multiplicity. New York: Princeton Architectural, 2003. Print.

Notes

[1] Rawsthorn, Alice. *DESIGN; The Demise of 'Form Follows Function'* (The New York Times, 01 June 2009). Web.

[2] Grobman, Yasha, and Eran Neuman. P*erformalism: Form and Performance in Digital Architecture.* (London: Routledge, 2012). p. 161

[3] Henri Lefebvre, *The Production of Space.* (Oxford, OX, UK: Blackwell, 1991). p. 26, 48.

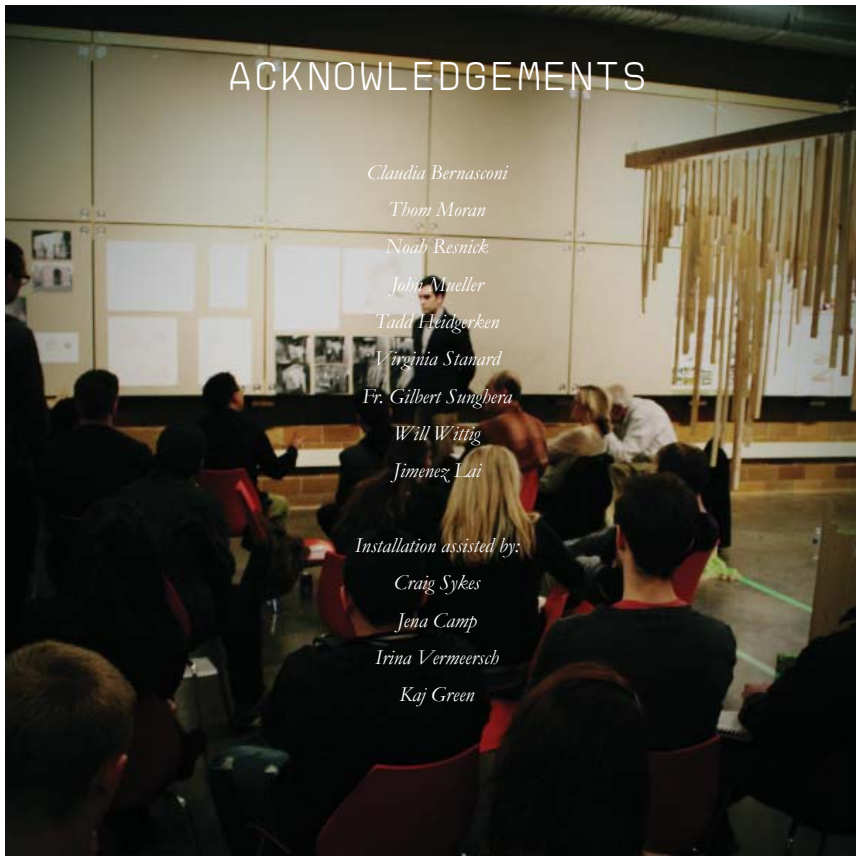

ACKNOWLEDGEMENTS

Claudia Bernasconi

Thom Moran

Noah Resnick

John Mueller

Tada Heidgerken

Virginia Stanard

Fr. Gilbert Sunghera

Will Wittig

Jimenez Lai

Installation assisted by:

Craig Sykes

Jena Camp

Irina Vermeersch

Kaj Green